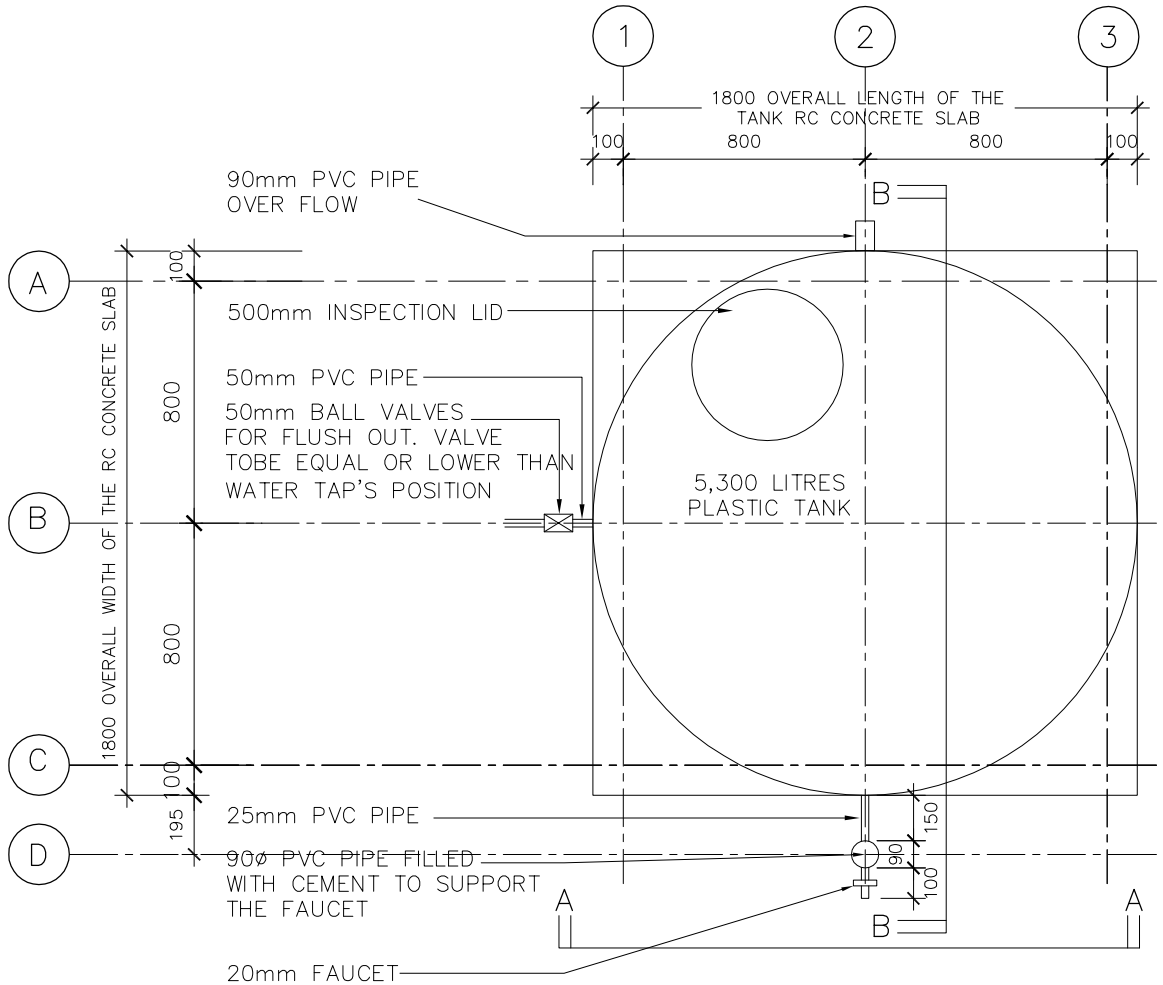

DETAIL PLAN FOR
1– 5,300L TANK 1 : 25

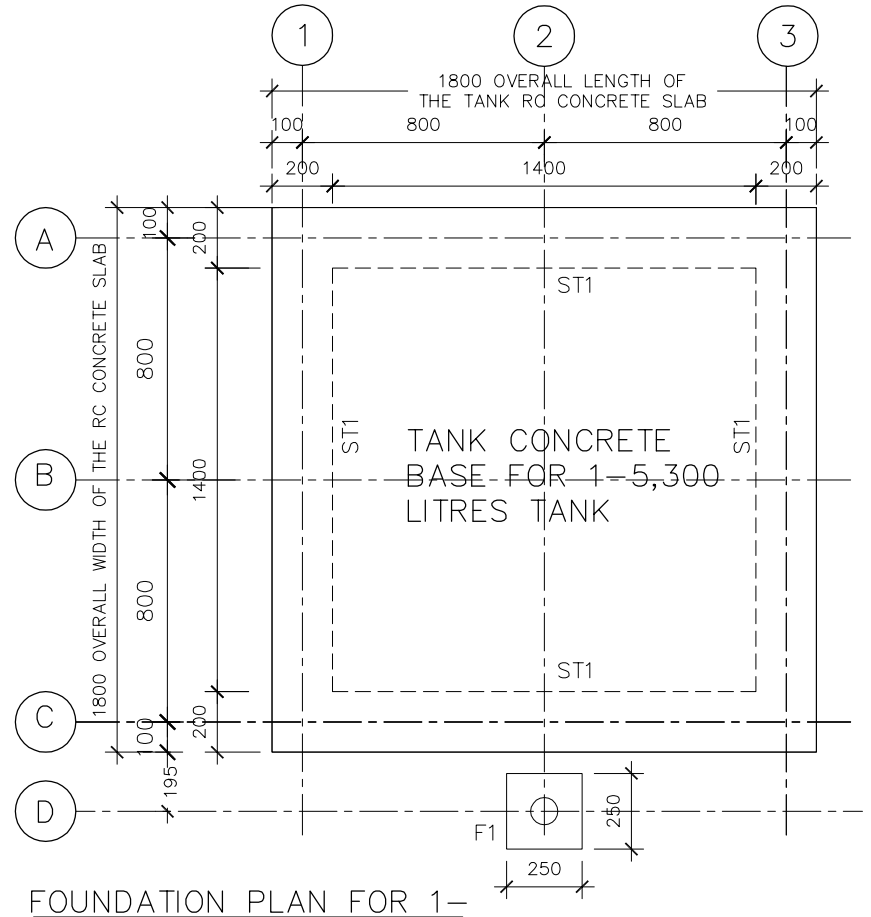

FOUNDATION PLAN FOR 1–
5,300L TANK 1 : 25

FOUNDATION SCHEDULE

ST1 – 220x200 DEEP RC SLAB THICKENING WITH 150x150x4mm MESH WIRE

F1 – 250Sq x 350 DEEP CONCRETE FOOTING

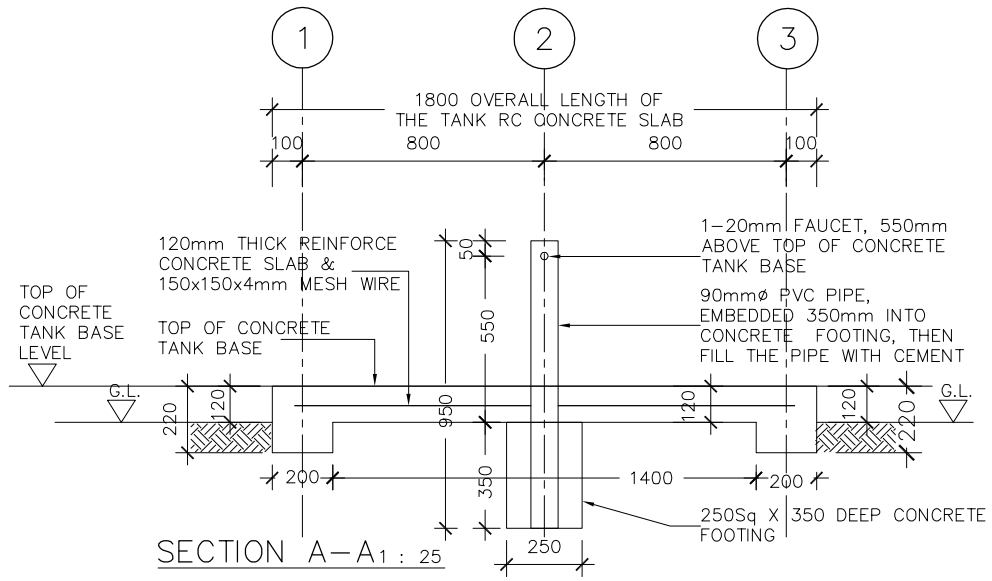

SECTION A–A 1 : 25

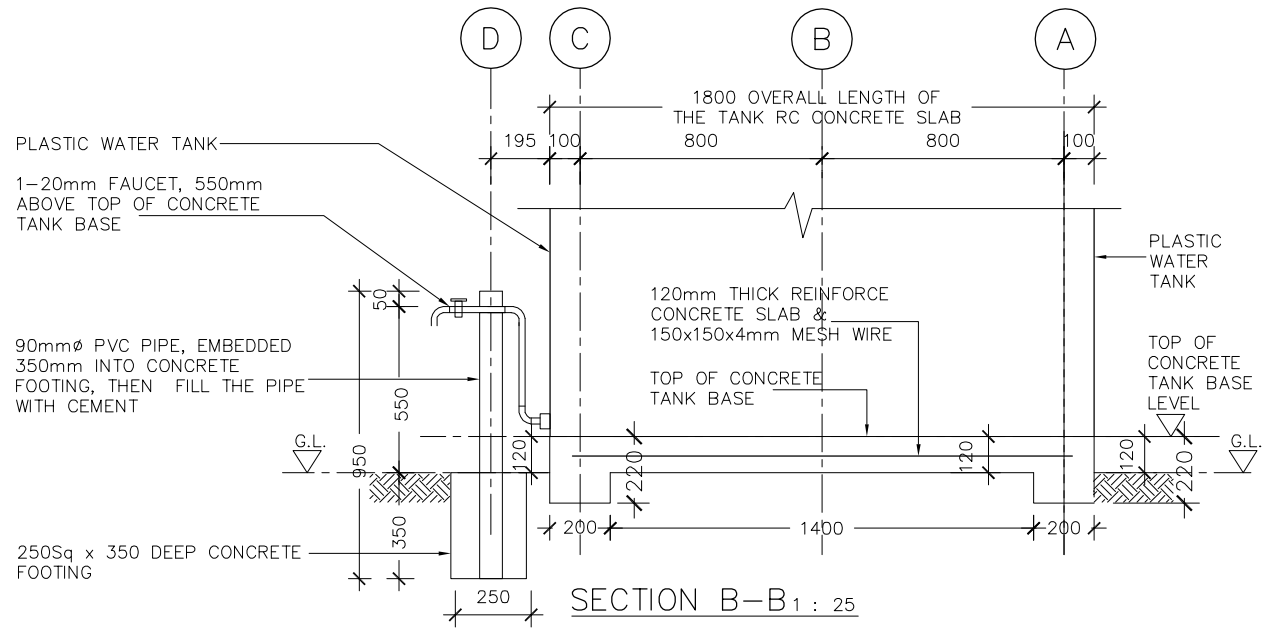

SECTION B–B 1 : 25

Pacific Community
Commmunat'e du Pacifique
SPC - Private Mail Bag - Suva, Fiji
Tel: (679) 337 9349 Ext:35453 Fax:(679)3370021
Email: tofingaf@spc.int

COPYRIGHT
THE INFORMATION CONTAINED IN THIS DOCUMENT IS THE COPYRIGHT OF PACIFIC COMMUNITY. UNLAWFUL USE OR DUPLICATION IN PART OR IN WHOLE OF THE DOCUMENT WITHOUT THE PRIOR WRITTEN CONSENT OF CHAND ENGINEERING CONSULTANTS LTD SHALL BE ACCOUNTED AS INFRINGEMENT OF COPYRIGHT

CLIENT:
THE GOVERNMENT OF THE REPUBLIC OF NAURU

PROJECT:
GCCA+ SUPA PROJECT - INSTALLATION OF CONCRETE TANK BASES AND TANKS

DRAWING TITLE:
1x5,300L TANK - CONCRETE BASE DETAIL PLAN & FOUNDATION PLAN & SECTIONAL DETAILS

REV		BY	DATE

DESIGNED TOFINGA	DESIGN CHK	SCALE AS STATED
DRAFTED TOFINGA	DRAFTING CHK	ISSUE DATE 08/08/21
PROJECT NO. SUPA - 01	DRAWING SHT S-01	REVISION R00